Lodestar Air XL Pneumatic Chain Hoist 氣動鍊條吊車

Columbus McKinnon introduces a new line of Lodestar Air XL chain hoists for lifting applications from 2 to 7 1/2 tons. The offering provides heavy-duty hoists featuring variable speeds and higher capacities than traditional air chain hoists. Workers in automotive plants, heavy equipment manufacturing, chemical plants, refineries, and related rugged work environm ents will experience the same dependability and versatility that they have relied on from CM products for many years.

The features of the Lodestar Air XL Chain Hoist includes:

- Lifting capacities up to 7 1/2 tons
- Variable lifting speeds
- Maximum lifting speed of 31 feet per minute
- Forged ten-pocket oblique-lay liftwheel for smooth chain operation, constant chain speed, and reduced chain wear
- Standard overload protector
- Clutch acts as upper and lower limits
- Six-vane rotary air motor
- Pendant controls provide precise load spotting
- Air actuated motor brake for positive load control
- Factory tested at 125% of rated capacity
- Spark resistant models available
- Lifetime warranty
- Made in U.S.A.
- Standard Lift: 10 ft.
- Air inlet size: 1″ NPT
- Air supply hose size: 1″ I.D. min.
- Consumption: 175 CFM at 90 PSI
- Exhaust: 11/4″ NPT

HWE WANG ENTERPRISES INC.
NO.178 SHYE RD., CHIANJEN DIST, KAOHSIUNG (80672) TAIWAN ／ TEL : 886-7-8317878 ／ FAX : 886-7-8311789 • 886-7-8224967

Lodestar Air XL with Hook Suspension-Specifications 上鉤頭懸吊及尺寸規格

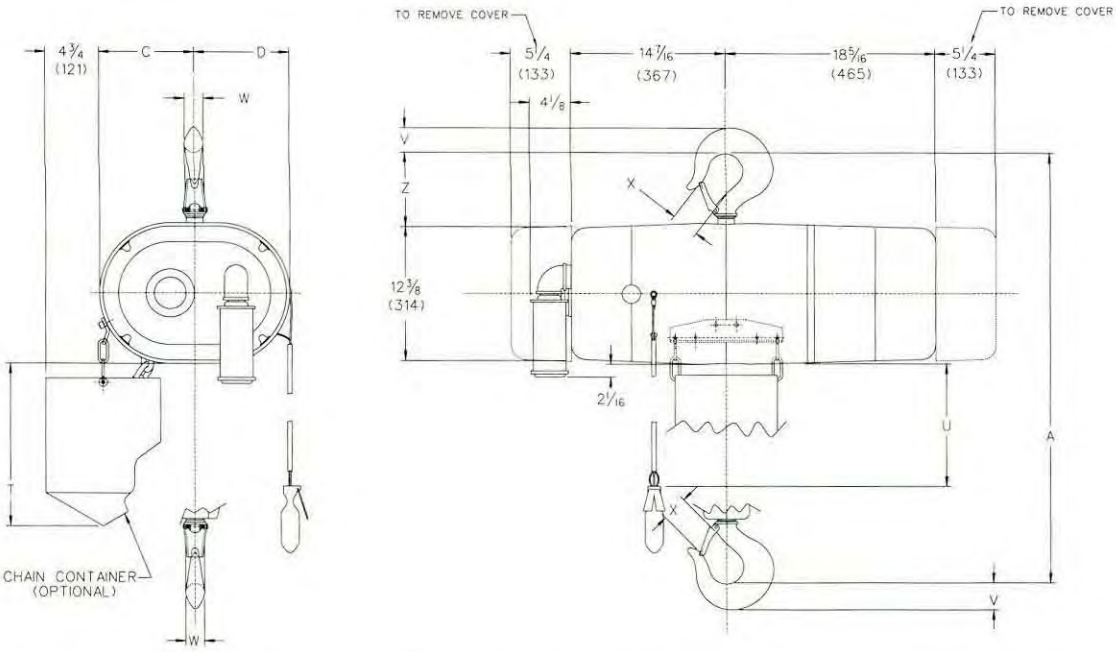

Clearance Dimensions (inches)**

Dimensions	Single Reeved 2 ton capacity	Double Reeved 3-5 ton capacity	Triple Reeved 6 ton capacity
A	25	35 5/16	36 3/16
C	8 7/16	11 3/8	11 3/8
D	8 1/8	5 1/2	5 1/2
T (based on 10 ft. lift)	14 3/16	14 3/16	14 3/16
U (based on 10 ft. lift)	6'- 3"	6'- 3"	6'- 3"
V	1 1/2	2 1/4	2 1/4
W	1 1/8	1 5/8	1 5/8
X	1 5/16	2 1/16	2 1/16
Z	4 1/8	5 1/2	5 1/2
Weight (lbs.)	347	421	453
Lifting Speed (FPM)	31	21/13	10

**Dimensions listed are for minimum size "S" beam.

CM® Repair/Replacement Policy

All Hoists are thoroughly inspected and performance tested prior to shipment. If any properly maintained CM Hoist develops a performance problem due to a material or workmanship defect, as verified by Columbus McKinnon, repair or replacement of the hoist will be made to the original purchaser without charge. This repair/replacement policy applies only to Hoists installed, maintained and operated as outlined in the applicable accompanying CM Hoist Manual, and specifically excludes normal wear, abuse, improper installation, improper or inadequate maintenance, hostile environmental effects, and unauthorized repairs/modifications.

ANSI/OSHA

CM hoists are manufactured in accordance with our interpretation of the ASME/ANSI Code B30.16 for Overhead Hoists and U.S. Occupational Safety and Health Act regulations at the time of manufacture. Users should check each installation for compliance with the application, operation and maintenance requirements of these regulations and standards.

HWE WANG ENTERPRISES INC.
NO.178 SHYE RD., CHIANJEN DIST, KAOHSIUNG (80672) TAIWAN ／ TEL：886-7-8317878 ／ FAX：886-7-8311789 • 886-7-8224967

Lodestar Air XL with plain trolley and geared trolley-Specifications

平面小車及手拉捲輪小車尺寸規格

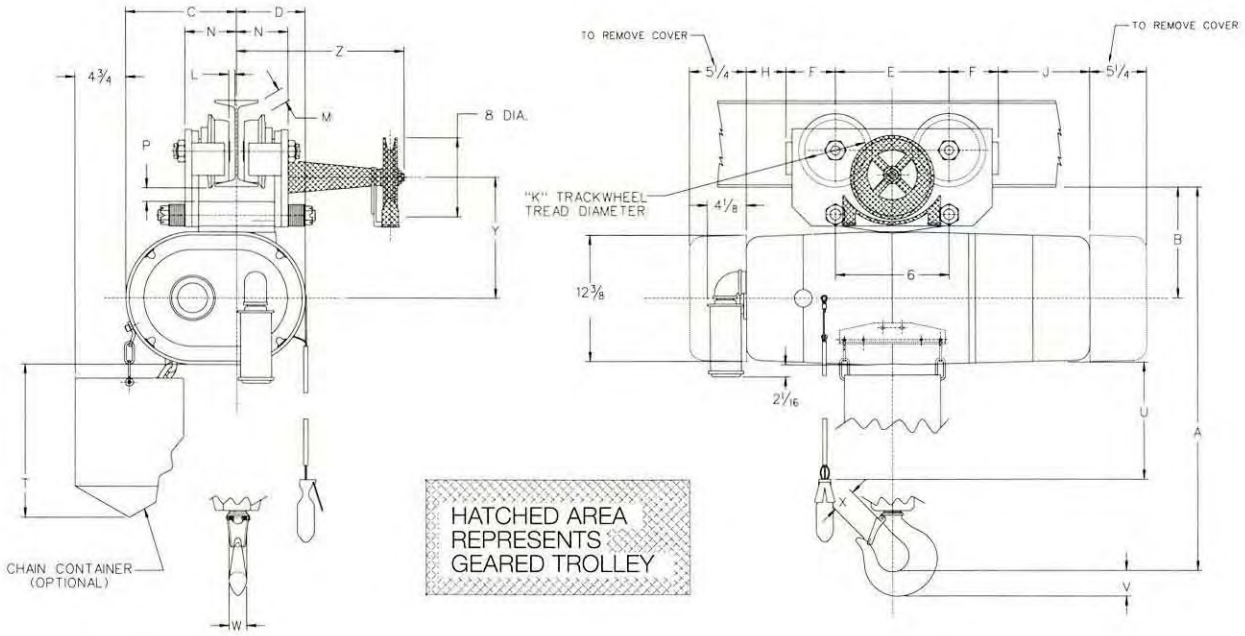

Dimensions	Clearance Dimensions (inches)** Single Reeved 2 ton capacity	Double Reeved 3 ton capacity	Double Reeved 5 ton capacity	Triple Reeved 6 & 7½ ton capacity
A	28 11/16	33½	33¾	34⅝
B	9¾	10 7/16	10 11/16	10 11/16
C	8 7/16	11⅜	11⅜	11⅜
D	8⅜	5½	5½	5½
E	9½	9⅛	12	12
F	3½	3¼	4 13/16	4 13/16
H	5¼	5 11/16	2 11/16	2 11/16
J	10 1/16	10½	7½	7½
K	4 11/16	4	6½	6½
L	½	⅝	⅝	⅝
M	½	2 11/16	0	0
N	5	3⅝	3⅞	3⅞
P	1¼	⅜	7/16	7/16
T (based on 10 ft. lift)	14 3/16	14 3/16	14 3/16	14 3/16
U (based on 10 ft. lift)	6'- 3"	6'- 3"	6'- 3"	6'- 3"
V	1½	2¼	2¼	2¼
W	1⅛	1⅝	1⅝	1⅝
X	1 5/16	2 1/16	2 1/16	2 1/16
Y*	11 5/16	12⅞	11⅛	11⅛
Z*	–	19⅛	19⅛	19⅛
Weight (lbs.)-Plain Trolley	407	476	576	608
Weight (lbs.)-Geared Trolley	452	491	586	618
Minimum Radius Curve (ft.)	4	4	6	6
Standard Beam Flange Adj. Range (in.)	3.33-5.55	4.00-6.25	4.00-6.25	4.00-6.25
Lifting Speed (FPM)	31	21	13	10/9

*Geared Trolley Dimensions Only

**Dimensions listed are for minimum size "S" beam.

HWE WANG ENTERPRISES INC.
NO.178 SHYE RD., CHIANJEN DIST, KAOHSIUNG (80672) TAIWAN ／ TEL：886-7-8317878 ／ FAX：886-7-8311789 • 886-7-8224967

氣動馬達驅動小車-尺寸規格

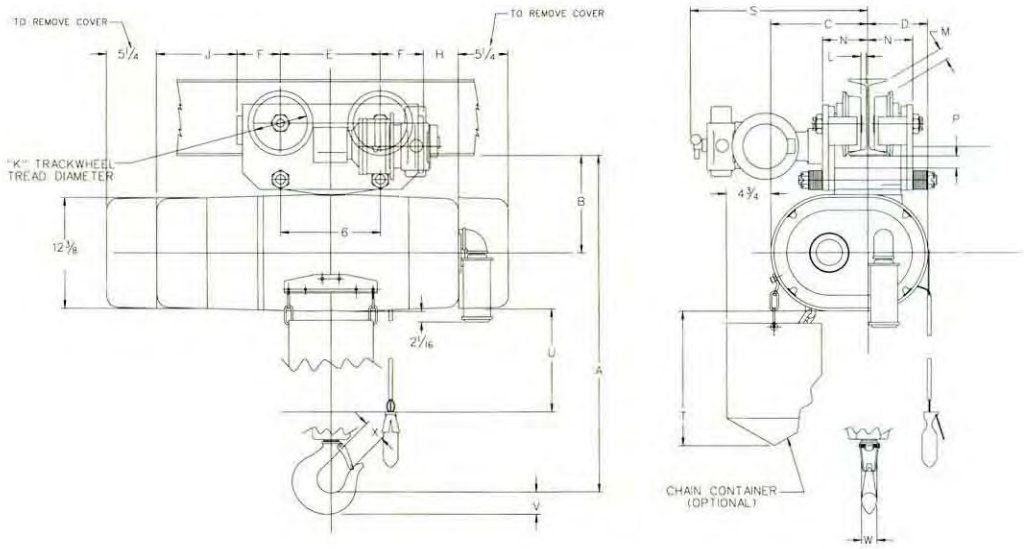

⚠WARNING

Failure to properly install, operate and maintain the Lodestar Air XL Hoist may result in injury and/or property damage.

TO AVOID INJURY:

- Installation, maintenance and operation must be carried out as instructed in the manual provided with the Lodestar Air XL Hoist.
- Do not use the Lodestar Air XL Hoist for lifting people; special equipment is required for this purpose. Refer to ASME/ANSI A-17 Series and applicable state and local codes for specific requirements.

Clearance Dimensions (inches)**

		Double Reeved		Triple Reeved
Dimensions	2 ton capacity	3 ton capacity	5 ton capacity	6 & 7½ ton capacity
A	33½	33½	33¾	34⅝
B	10⁷⁄₁₆	10⁷⁄₁₆	10¹¹⁄₁₆	10¹¹⁄₁₆
C	9⁵⁄₁₆	11⅜	11⅜	11⅜
D	7⁹⁄₁₆	5½	5½	5½
E	9⅛	9⅛	12	12
F	3¼	3¼	4¹³⁄₁₆	4¹³⁄₁₆
H	5¹¹⁄₁₆	5¹¹⁄₁₆	2¹¹⁄₁₆	2¹¹⁄₁₆
J	10½	10½	7½	7½
K	4	4	6½	6½
L	⅝	⅝	⅝	⅝
M	2¹¹⁄₁₆	2¹¹⁄₁₆	0	0
N	3⅝	3⅝	3⅞	3⅞
P	⅜	⅜	⁷⁄₁₆	⁷⁄₁₆
S	15¹⁵⁄₁₆	15¹⁵⁄₁₆	17¾	17¾
T (based on 10 ft. lift)	14³⁄₁₆	14³⁄₁₆	14³⁄₁₆	14³⁄₁₆
U (based on 10 ft. lift)	6'- 3"	6'- 3"	6'- 3"	6'- 3"
V	2¼	2¼	2¼	2¼
W	1⅝	1⅝	1⅝	1⅝
X	2¹⁄₁₆	2¹⁄₁₆	2¹⁄₁₆	2¹⁄₁₆
Minimum Radius Curve (ft.)	4	4	6	6
Weight (lbs.)	505	569	611	643
Standard Beam Flange Adj. Range (in.)	4.00-6.25	4.00-6.25	4.00-6.25	4.00-6.25
Trolley Speed (ft./min) Standard Single Speed	50	50	50	50
Lifting Speeds	31	21	13	10/9

**Dimensions listed are for minimum size "S" beam.

HWE WANG ENTERPRISES INC.
NO.178 SHYE RD., CHIANJEN DIST, KAOHSIUNG (80672) TAIWAN ／ TEL：886-7-8317878 ／ FAX：886-7-8311789 • 886-7-8224967

ShopAir™ chain hoist 小金剛氣動小吊車

Compact, powerful, and precise for assembly and manufacturing applications up to 1,000 pounds.

The CM ShopAir combines superior lifting speeds, rugged design, and precise load spotting in a portable air chain hoist. As a workstation hoist or a production line hoist, the ShopAir is the ideal choice.

CAPACITIES:	250 to 1,000 Lbs.
NORMAL OPERATING PRESSURE:	90 PSI (6.2 bar)
AIR CONSUMPTION:	34 cu.feet/min.

- Standard Protector™ overload device.
- 10-pocket, oblique lay liftwheel provides longer chain life.
- Epoxy powder coat finish provides a durable exterior.
- Durable reduction gearing means reliable operation
- Variable flow, two lever pendant for precise load spotting.
- Threaded external exhaust for piping away exhaust in clean room or painting applications.
- Small, compact design for commercial & industrial applications.
- Industrial duty air motor for tough applications.
- Gear train is lifetime - lubricated with non-oxidizing grease.
- Hardened forged steel, latch - type lower hook rotates 360°.
- Hardened forged steel, rigid latch - type upper hook.
- Rugged cast aluminum alloy hoist frame.
- Alloy load chain.
- Maximum pendant drop - 36 ft.
- Lifetime warranty against defects in materials and workmanship.
- Made in U.S.A.

300 Lb. model shown with optional chain container

HWE WANG ENTERPRISES INC.
NO.178 SHYE RD., CHIANJEN DIST, KAOHSIUNG (80672) TAIWAN / TEL : 886-7-8317878 / FAX : 886-7-8311789 • 886-7-8224967

ShopAir™ chain hoist-Specifications 小金剛氣動小吊車-尺寸規格

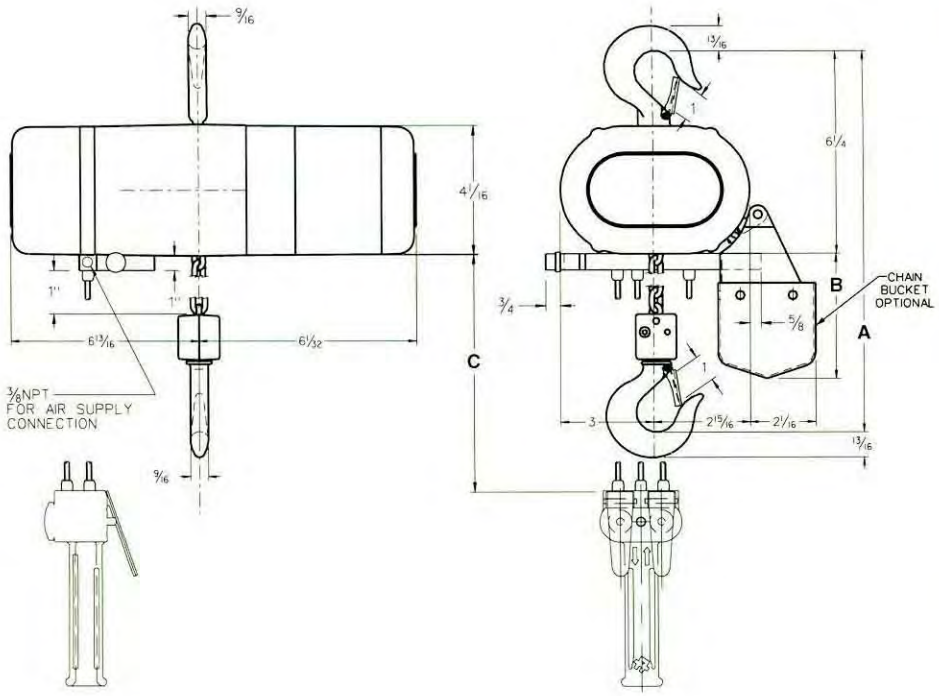

Specifications

Product code	Cap. (lbs.)	(in.) A	(in.) B	(in.) *C	Number of load chains	Speed FPM (under full load) lifting	Speed FPM (under full load) lowering	Shipping weight (lbs.)
2178	250	$10^{7}/_{8}$	$3^{7}/_{8}$	6' 4"	1	31	83	30
2180	300	$10^{7}/_{8}$	$3^{7}/_{8}$	6' 4"	1	31	83	30
2182	500	$10^{7}/_{8}$	$3^{7}/_{8}$	6' 4"	1	21	75	30
2179	500	$11^{15}/_{16}$	$5^{3}/_{4}$	6' 4"	2	16	42	34
2181	600	$11^{15}/_{16}$	$5^{3}/_{4}$	6' 4"	2	16	42	34
2183	1,000	$11^{15}/_{16}$	$5^{3}/_{4}$	6' 4"	2	11	38	34

*** ⚠ WARNING**

Overloading and improper use can result in injury.

To avoid injury:
- Do not exceed working load limit, load rating capacity
- Do not use to lift people or loads over people.
- use only alloy chain for overhead lifting.
- Read and follow all instructions.

HWE WANG ENTERPRISES INC.
NO.178 SHYE RD., CHIANJEN DIST, KAOHSIUNG (80672) TAIWAN ／ TEL：886-7-8317878 ／ FAX：886-7-8311789 • 886-7-8224967

AirStar chain hoist 氣動之星鍊條吊車

Designed for general commercial applications where variable speed pneumatic power is preferable. Rated for 1/4, 1/2 and 1 ton capacities, this compact, lightweight hoist features:

- Hoistaloy load chain for heavy duty or stainless steel chain for spark resistant, medium duty loads
- Positive action, heavy-duty shoe type brake that holds the load
- Multi-vane rotary air motor for high torque, smooth operation
- Accurately machined heat treated alloy steel spur gears
- Spark resistant models available for hazardous environments
- Pull cord or pendant throttle control available
- Pull cord control hoists provide a lightweight, economical hoist for accurate control of loads
- Optional pendant throttle control hoists offer ergonomic, one-hand control for ease of operation
- Hook or lug suspension available
- Inlet air swivel with built-in strainer provides free hoist movement
- Aluminum frame and end cover contributes to the lightweight, easily portable, and rugged design
- External brake adjustment
- Limit stops prevent over-travel in upper and lowering directions
- Equa-torque gearing of alloy steel, heat treated spur gears are accurately machined to provide a close meshed, compact gear reduction
- Tapped exhaust port 1/2 NPTF... for cleanroom applications or to add a supplemental muffler in addition to the built-in muffler for even quieter operation
- Lifetime warranty
- Metric rated
- Made in U.S.A.

Basic Hoist Data

Rated Loads: 1/4, 1/2 and 1 Ton (Spark resistant models are rated at 3/8 and 3/4 ton)

Air Pressure

Recommended: 90 PSI

Air Consumption: 48 SCFM at 90 PSI

Net Wt. (Basic Hoist): 36 lbs.

Suspension: Hook or lug

Control: Pull Cord or Pendant Throttle

Air Inlet: 3/8 NPTF

Air Supply Hose: 1/2 I.D. min.

Air Exhaust: 1/2 NPTF

Lift: 10 foot lifts are standard. Longer lifts are an optional extra.

Pendant Control: 6 foot length is standard. Longer lengths are an optional extra.

Optional: For greater corrosion resistance, a plated load chain is offered as an optional extra.

HWE WANG ENTERPRISES INC.
NO.178 SHYE RD., CHIANJEN DIST, KAOHSIUNG (80672) TAIWAN ／ TEL：886-7-8317878 ／ FAX：886-7-8311789 • 886-7-8224967

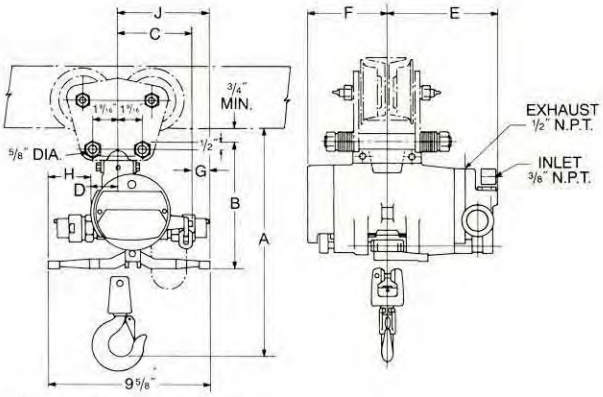

¼ and ½ ton standard
⅜ ton spark resistant

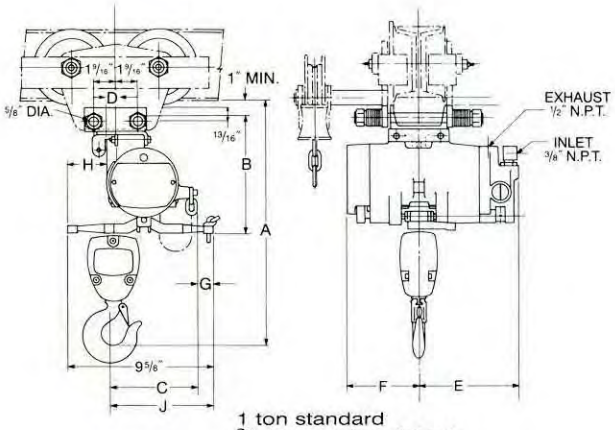

1 ton standard
¾ ton spark resistant

Clearance dimensions (in.)

Rated capacity* (tons)	Product code	A	B	C	D	E	F	G	H	J
¼	7400F	13 7/8	8 1/8	4 3/4	1 3/4	7 1/16	5 1/16	15/16	2 3/16	5 11/16
¼	7400G	13 7/8	8 1/8	4 3/4	1 3/4	7 1/16	5 1/16	15/16	2 3/16	5 11/16
½	7401F	13 7/8	8 1/8	4 3/4	1 3/4	7 1/16	5 1/16	15/16	2 3/16	5 11/16
½	7401G	13 7/8	8 1/8	4 3/4	1 3/4	7 1/16	5 1/16	15/16	2 3/16	5 11/16
⅜	7403C	13 7/8	8 1/8	4 3/4	1 3/4	7 1/16	5 1/16	15/16	2 3/16	5 11/16
⅜	7403D	13 7/8	8 1/8	4 3/4	1 3/4	7 1/16	5 1/16	15/16	2 3/16	5 11/16
1	7402F	17	8 1/4	5 3/4	3/4	7 1/16	5 1/16	15/16	2 3/16	6 11/16
1	7402G	17	8 1/4	5 3/4	3/4	7 1/16	5 1/16	15/16	2 3/16	6 11/16
¾	7404C	17	8 1/4	5 3/4	3/4	7 1/16	5 1/16	15/16	2 3/16	6 11/16
¾	7404D	17	8 1/4	5 3/4	3/4	7 1/16	5 1/16	15/16	2 3/16	6 11/16

Specifications

Type	Rated capacity* (tons)	Pull cord control: Product code no.	Pull cord control: Net wt. (lbs.)	Pendant throttle control**: Product code no.	Pendant throttle control**: Net wt. (lbs.)	Reeving	Lifting speed max.† (F.P.M.)	Lowering speed max.† (F.P.M.)
Standard models								
Link chain	¼	7400F	36	7400G	46	1	65	95
	½	7401F	36	7401G	46	1	45	120
	1	7402F	49	7402G	59	2	23	60
Spark resistant models								
Link chain	⅜	7403C	36	7403D	46	1	60	100
	¾	7404C	49	7404D	59	2	29	52

**Equipped with 6 ft. pendant control.

† Speeds based on 90 PSI line pressure and with full rated hoist load.

Hoist speeds are adjustable and can be reduced to 50% of full rated speed. Shipped from factory with hoisting speed set at maximum rated speed; lowering speed set at reduced speed.

Standard lift 10 feet. Longer lifts available.

Spark Resistant Models

Spark resistant models offer maximum protection in hazardous environments. Components for spark resistance include bronze alloy hooks, stainless steel hook latches, non-magnetic chrome-nickel stainless steel load chain, modified load sprocket, guide and stripper arrangement and lower blocks of stainless steel for the 3/8-ton single line model and anodized aluminum body on the 3/4-ton two part reeved model.

The spark resistant models have capacities derated. The stainless steel load chain is lower strength and not as hard as the standard alloy steel load chain, thereby requiring reduced capacity ratings on these models.

Warning: The equipment illustrated here is not designed or suitable as a power source for lifting or lowering persons. Exceedi[illegible]ed capacity is dangerous and can result in injury to [illegible]ons and damage property.

HWE WANG ENTERPRISES INC.
NO.178 SHYE RD., CHIANJEN DIST, KAOHSIUNG (80672) TAIWAN / TEL : 886-7-8317878 / FAX : 886-7-8311789 • 886-7-8224967

AirStar 6 air hoist 氣動之星6 氣動吊車

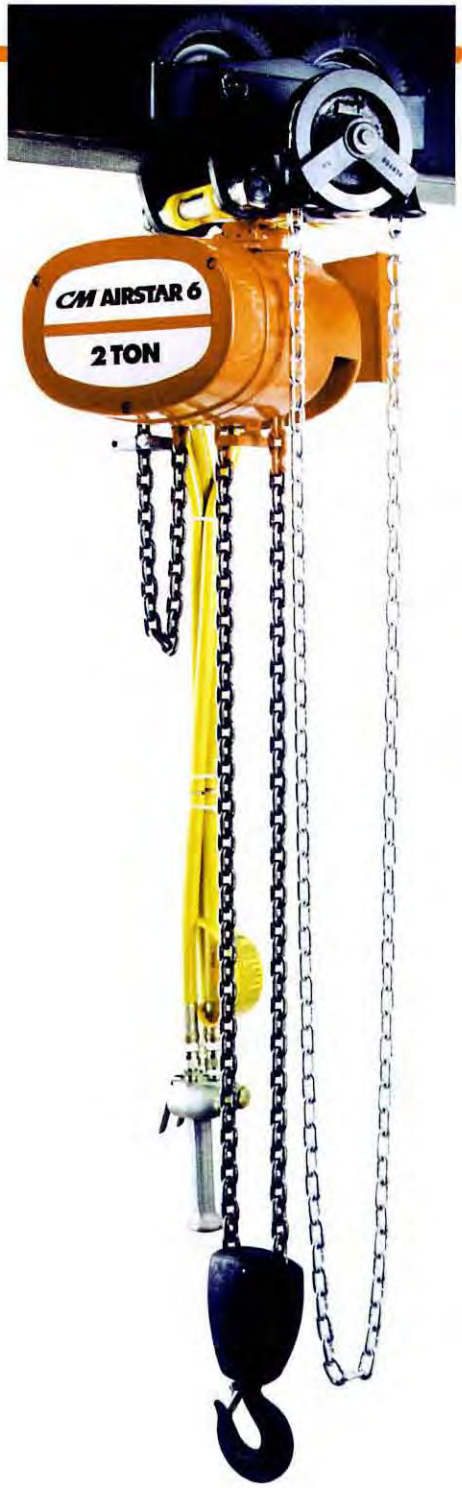

Designed for general industrial applications where variable speed pneumatic power is preferable. Rated for loads of up to 3 tons. This compact, lightweight hoist features:

- Hoistaloy load chain for heavy duty or stainless steel chain for spark resistant, medium duty loads
- Lightweight aluminum frame and cover
- Positive action, spring biased Weston-type load brake holds the load, provides exacting load spotting and control
- Multi-vane rotary air motor with eight vanes for high torque, smooth operation, positive starting
- Precision cut heat treated helical and spur gear combination for quiet, efficient operation
- Pendant throttle handle is full flow design for precision throttle capabilities
- Spark resistant models available for hazardous environments
- Hook or lug suspension available
- Standard overload protector device
- Internal Muffler-reduces sound level
- Throttle Valve—precision throttle valves meter the air for smooth operation
- Chain container optional
- Lifetime warranty
- Metric rated
- Made in U.S.A.

Basic Hoist Data

Rated Loads: 1, 2, and 3-ton (Spark resistant models are rated at 1/2, 1 and 2 ton)

Air Pressure

Recommended: 90 PSI

Air Consumption: 70 SCFM (full load-full speed) slow speed model 80 SCFM (full load-full speed) fast speed model

Pendant Control Hose: 6 foot pendant hose standard for 10 foot lift hoist, longer hose assemblies up to 36 foot available.

Lift: 10 foot lifts are standard. Longer lifts are an optional extra.

Net Wt. (Basic Hoist): 100 pounds

Suspension: Hook or lug

Air Inlet Size: 3/4 NPTF

Air Supply Hose Size: 3/4 I.D. min.

HWE WANG ENTERPRISES INC.
NO.178 SHYE RD., CHIANJEN DIST, KAOHSIUNG (80672) TAIWAN ／ TEL：886-7-8317878 ／ FAX：886-7-8311789 • 886-7-8224967

AirStar 6 with hook suspension-Specifications

氣動之星6 氣動吊車附上鉤頭-尺寸規格

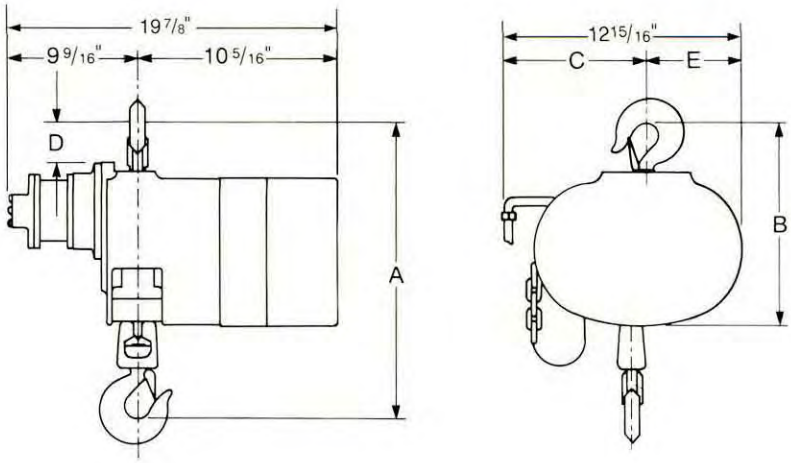

Clearance dimensions (in.)

Rated capacity* (tons)	Product code	A	B	C	D	E
½	7408A	16 3/4	11 1/16	6 3/4	2 11/16	6 3/16
1	7405A	16 3/4	11 1/16	6 3/4	2 11/16	6 3/16
1	7405B	16 3/4	11 1/16	6 3/4	2 11/16	6 3/16
1	7409A	22 7/8	12 13/16	8 1/16	4 7/16	4 7/8
2	7406A	22 7/8	12 13/16	8 1/16	4 7/16	4 7/8
2	7406B	22 7/8	12 13/16	8 1/16	4 7/16	4 7/8
2	7410A	25 7/8	14 3/8	5 13/16	5 5/8	7 1/8
3	7407A	25 7/8	14 3/8	5 13/16	5 5/8	7 1/8
3	7407B	25 7/8	14 3/8	5 13/16	5 5/8	7 1/8

Specifications

Model	Rated capacity* *(tons)*	Product *code*	*Reeving*	Full load hoist speed** *(F.P.M.)*	Full load lowering speed** *(F.P.M.)*	Approximate net *weight (lbs.)*
Standard model	1	7405A	1	13	18	93
	1	7405B	1	30	42	95
	2	7406A	2	6	9	110
	2	7406B	2	15	21	112
	3	7407A	3	4	6	144
	3	7407B	3	10	14	146
Spark resistant model	½	7408A	1	16	22	95
	1	7409A	2	8	11	112
	2	7410A	3	5	7	146

**Hoist speeds based on 90 PSI line pressure with full load at full throttle.

HWE WANG ENTERPRISES INC.
NO.178 SHYE RD., CHIANJEN DIST, KAOHSIUNG (80672) TAIWAN ／ TEL：886-7-8317878 ／ FAX：886-7-8311789 • 886-7-8224967

AirStar 6 with lug suspension 氣動之星6 附吊耳-尺寸規格

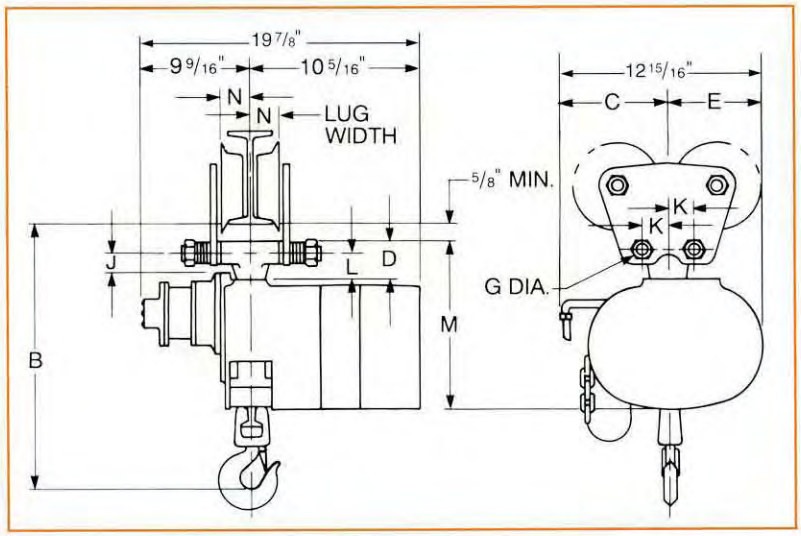

Clearance dimensions (in.)

Rated capacity* (tons)	Product code	B	C	D	E	J	K	L	M	N	G
1/2	7408B	16 1/4	6 3/4	2	6 3/16	7/8	1 9/16	1 5/16	9 15/16	1 13/16	5/8
1	7405C	16 1/16	6 3/4	2	6 3/16	7/8	1 9/16	1 5/16	9 15/16	1 13/16	5/8
1	7405D	16 1/16	6 3/4	2	6 3/16	7/8	1 9/16	1 5/16	9 15/16	1 13/16	5/8
1	7409B	21 3/8	8 1/16	2 13/16	4 7/8	1 1/2	2 1/2	1 15/16	10 11/16	2 3/16	1
2	7406C	19 3/4	8 1/16	2 13/16	4 7/8	1 1/2	2 1/2	1 15/16	10 11/16	2 3/16	1
2	7406D	19 3/4	8 1/16	2 13/16	4 7/8	1 1/2	2 1/2	1 15/16	10 11/16	2 3/16	1
2	7410B	25	5 13/16	4 5/8	7 1/8	2 15/16	3	3 3/8	12 7/8	3	1 1/4
3	7407C	23 3/4	5 13/16	4 5/8	7 1/8	2 15/16	3	3 3/8	12 7/8	3	1 1/4
3	7407D	23 3/4	5 13/16	4 5/8	7 1/8	2 15/16	3	3 3/8	12 7/8	3	1 1/4

Specifications

Model	Rated capacity* (tons)	Product code	Reeving	Full load hoist speed** (F.P.M.)	Full load lowering speed** (F.P.M.)	Approx. net weight (lbs.)
Standard model	1	7405C	1	13	18	106
	1	7405D	1	30	42	108
	2	7406C	2	6	9	116
	2	7406D	2	15	21	118
	3	7407C	3	4	6	164
	3	7407D	3	10	14	166
Spark resistant model	1/2	7408B	1	16	22	110
	1	7409B	2	8	11	120
	2	7410B	3	5	7	170

**Hoist speeds based on 90 PSI line pressure with full load at full throttle.

HWE WANG ENTERPRISES INC.
NO.178 SHYE RD., CHIANJEN DIST, KAOHSIUNG (80672) TAIWAN ／ TEL：886-7-8317878 ／ FAX：886-7-8311789 • 886-7-8224967